ITEM NO.	PART NUMBER	DESCRIPTION	Default/ QTY.
1	EI08SM4010	HOPPER, EP/EH 08	1
2	EP08CD0103	CLEAN OUT DOOR	1
3	EP8S0003	LOWER SUPPORT LEG	2
4	EP8S0004	UPPER SUPPORT LEG	2
5	EP35S008	Belt Tensioner Mount	2
6	EP8S0011	SPLICE PLATE	2
7	EP08S00603	ELEVATOR SUPPORT CHANNEL	1
8	EP08S00604	ELEVATOR SUPPORT CHANNEL	1
9	EP08000010	EP-08 TAKE-UP SHAFT	1
10	EP080M0021	CHANNEL SUPPORT	1
11	EP80016	BELT RETURN GUIDE LH	1
12	EP80017	BELT RETURN GUIDE RH	1
13	EP80018	HOPPER WELL SIDE	2
14	EP350300	BELT TENSIONER BRACKET	2
15	EP08000011	MOUNTING ANGLE	2
16	EP08000012	CONVEYOR CHANNEL	1
17	EP08000013	Side Guide, EP-08, LH	1
18	EP08000014	Side Guide, EP-08, RH	1
19	FOOTM12100	LEVEL FOOT M12X100MML STSTL	4
20	MEP8S0025	ELEVATOR BOTTOM COVER	1
21	MEP8S1100	EP-08 FRAME BASE WELDMENT	1
22	MEP80020	HOPPER WELL COVER	1
23	pullcnvep8	FOOD GRADE PULLEY, EP-08	1
24	BRNGINSM01-ASSY	BEARING ASSEMBLY	2
25	BRNGCOVR02	BEARING COVER (SHORT)	2

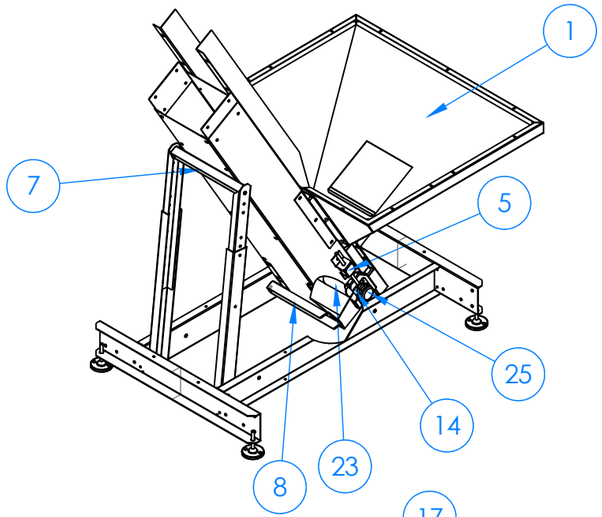

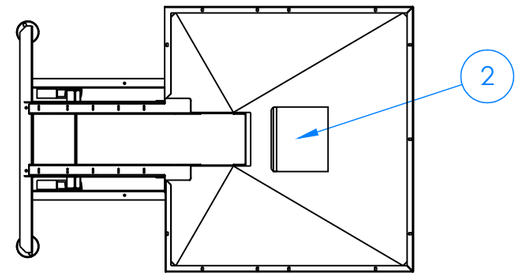

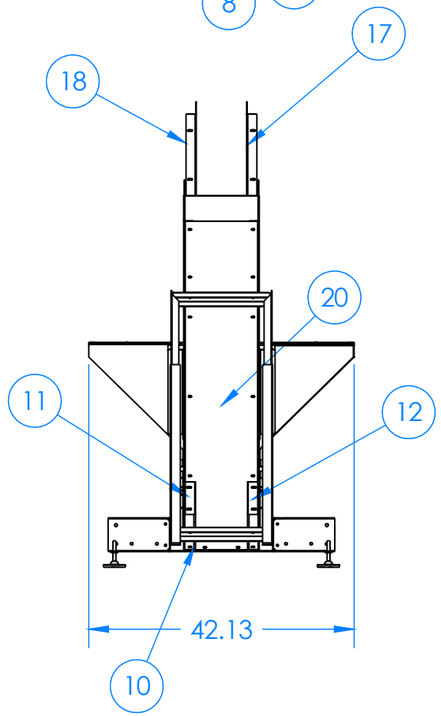

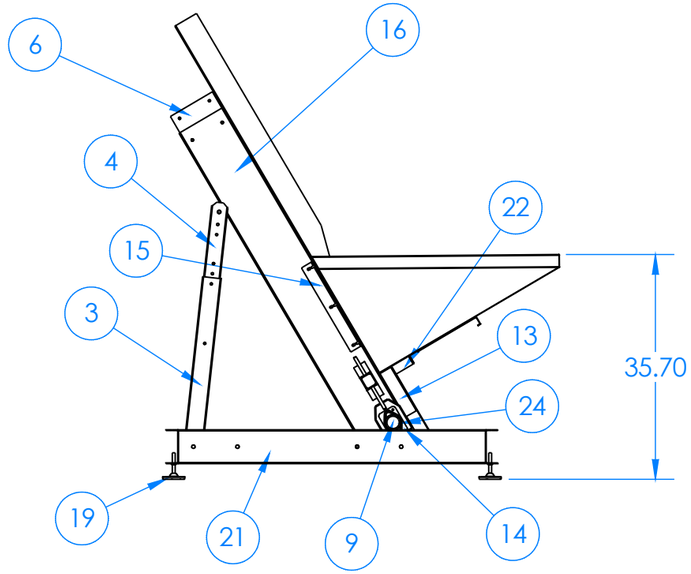

NOTICE
This document is the property of SHIBUYA HOPPMANN CORPORATION. It is not for publication and is issued in strict confidence and on condition that it is not copied, reprinted or disclosed to a third party either wholly or in part without the written consent of SHIBUYA HOPPMANN CORPORATION. Possession of this document does not authorize the holder to manufacture/duplicate the article it describes / specifies without the consent in writing of the SHIBUYA HOPPMANN CORPORATION. This document is to be returned on demand.

MATERIAL: N/A

FINISH: N/A

QTY: 1

NEXT ASSEMBLY:

UNLESS OTHERWISE NOTED:
ALL DIMENSIONS ARE IN INCHES

TOLERANCES FRACTIONS: ±1/32
ANGLES: ±.25°
DECIMALS: .x ± .030
.xx ± .015
.xxx ± .005

FINISH 125 REMOVE BURRS AND SHARP EDGES

THIRD ANGLE PROJECTION

TITLE: EP-08 BASE & HOPPER ASSY, 1" TAKE-UP PULLY

Shibuya Hoppmann™
www.shibuyahoppmann.com | sales@shibuyahoppmann.com

FAB / CHECK	DATE	FILE NUMBER: F25110005290X.SLDDRW							
		DRAFTER	DATE	CHECKED	DATE	E.E.	DATE	SCALE:	
		JRM	8/28/14	-	-	_	_	1:24	

DRAWING NO.: F25110005290

REV: X

C:\SHC_Vault\Item Drawings\F2\F251\Assembly\F25110005290
PRINTED ON 14-Feb-24 BY jdeal